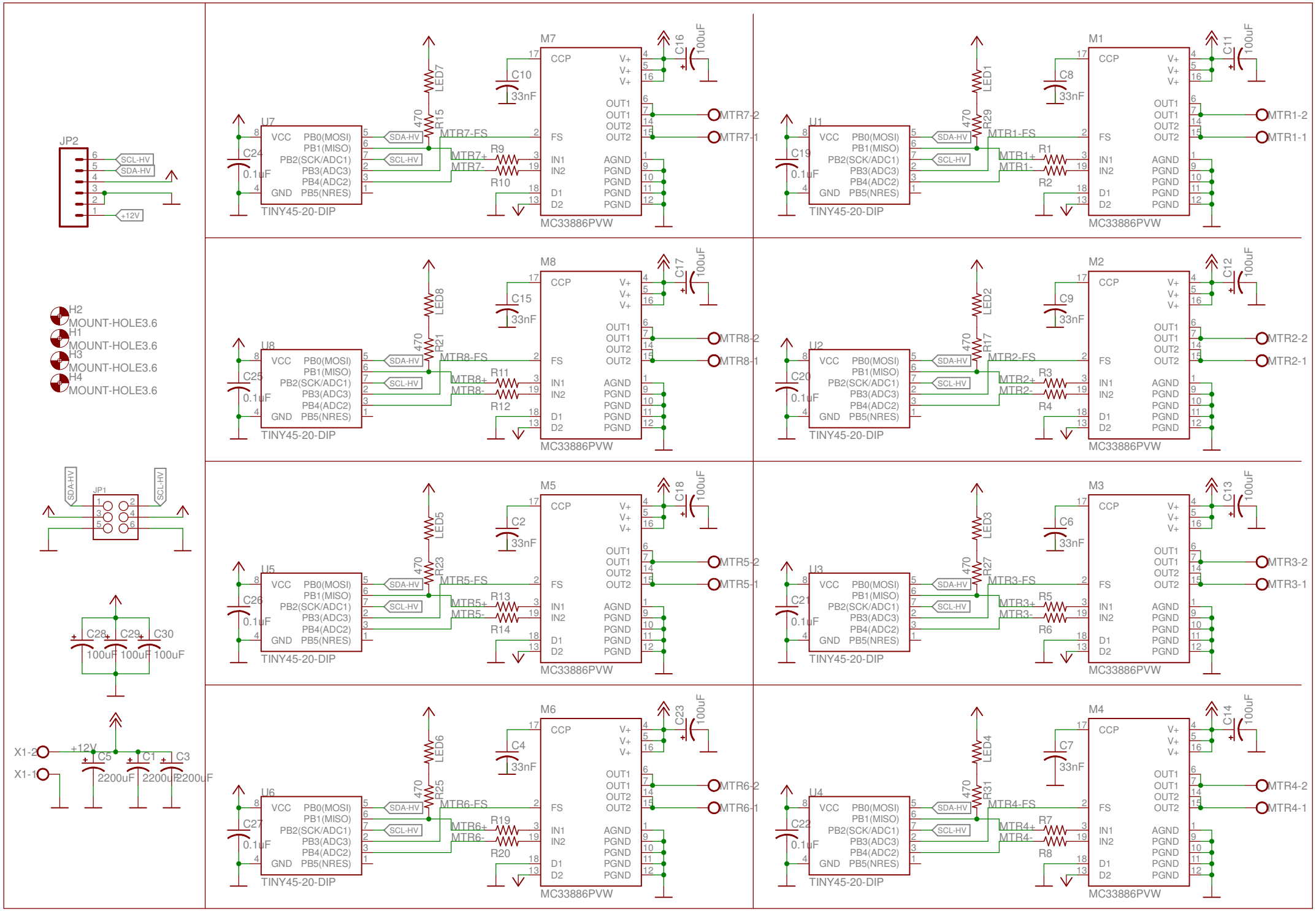
JP2
SCL-HV
SDA-HV
+12V
H2
MOUNT-HOLE3.6
H1
MOUNT-HOLE3.6
H3
MOUNT-HOLE3.6
H4
MOUNT-HOLE3.6
JP1
C28
C29
C30
100uF
X1-2
X1-1
C5
C1
C3
2200uF
U7
U8
U5
U6
U1
U2
U3
U4
TINY45-20-DIP
VCC
GND
PB0(MOSI)
PB1(MISO)
PB2(SCK/ADC1)
PB3(ADC3)
PB4(ADC2)
PB5(NRES)
C24
C25
C26
C27
C19
C20
C21
C22
0.1uF
LED7
LED8
LED5
LED6
LED1
LED2
LED3
LED4
R15
R21
R23
R25
R29
R17
R27
R31
470
MTR7-FS
MTR8-FS
MTR5-FS
MTR6-FS
MTR1-FS
MTR2-FS
MTR3-FS
MTR4-FS
MTR7+
MTR7-
MTR8+
MTR8-
MTR5+
MTR5-
MTR6+
MTR6-
MTR1+
MTR1-
MTR2+
MTR2-
MTR3+
MTR3-
MTR4+
MTR4-
R9
R10
R11
R12
R13
R14
R19
R20
R1
R2
R3
R4
R5
R6
R7
R8
M7
M8
M5
M6
M1
M2
M3
M4
CCP
FS
IN1
IN2
D1
D2
V+
OUT1
OUT2
AGND
PGND
MC33886PVW
C10
C15
C2
C4
C8
C9
C6
C7
33nF
C16
C17
C18
C23
C11
C12
C13
C14
100uF
MTR7-2
MTR7-1
MTR8-2
MTR8-1
MTR5-2
MTR5-1
MTR6-2
MTR6-1
MTR1-2
MTR1-1
MTR2-2
MTR2-1
MTR3-2
MTR3-1
MTR4-2
MTR4-1